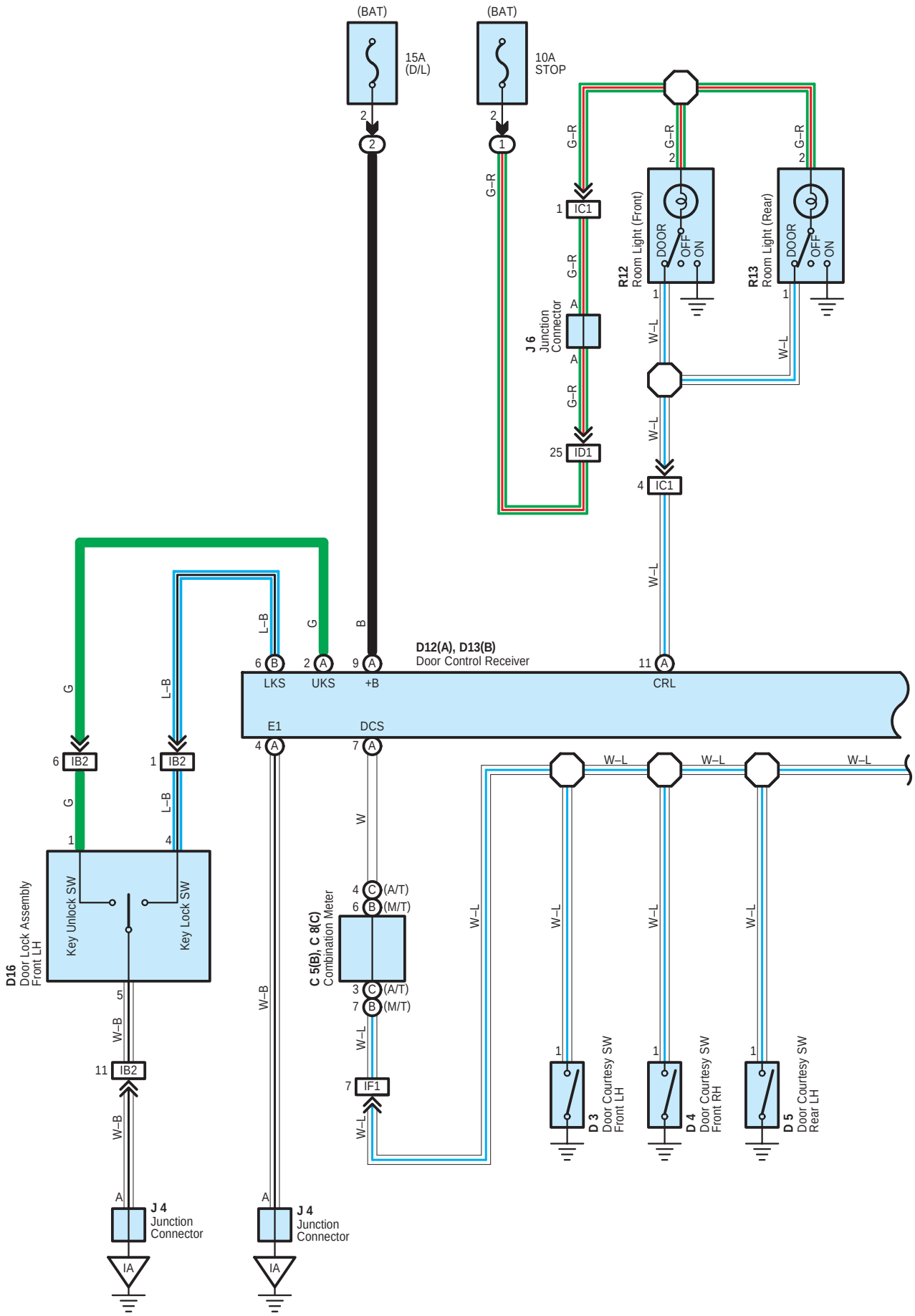
(BAT)
15A
(D/L)
(BAT)
10A
STOP
IC1
ID1
J 6
Junction
Connector
R12
Room Light (Front)
R13
Room Light (Rear)
DOOR
OFF
ON
D12(A), D13(B)
Door Control Receiver
LKS
UKS
+B
CRL
E1
DCS
IB2
D16
Door Lock Assembly
Front LH
Key Unlock SW
Key Lock SW
C 5(B), C 8(C)
Combination Meter
(A/T)
(M/T)
IF1
D 3
Door Courtesy SW
Front LH
D 4
Door Courtesy SW
Front RH
D 5
Door Courtesy SW
Rear LH
J 4
Junction
Connector
IA

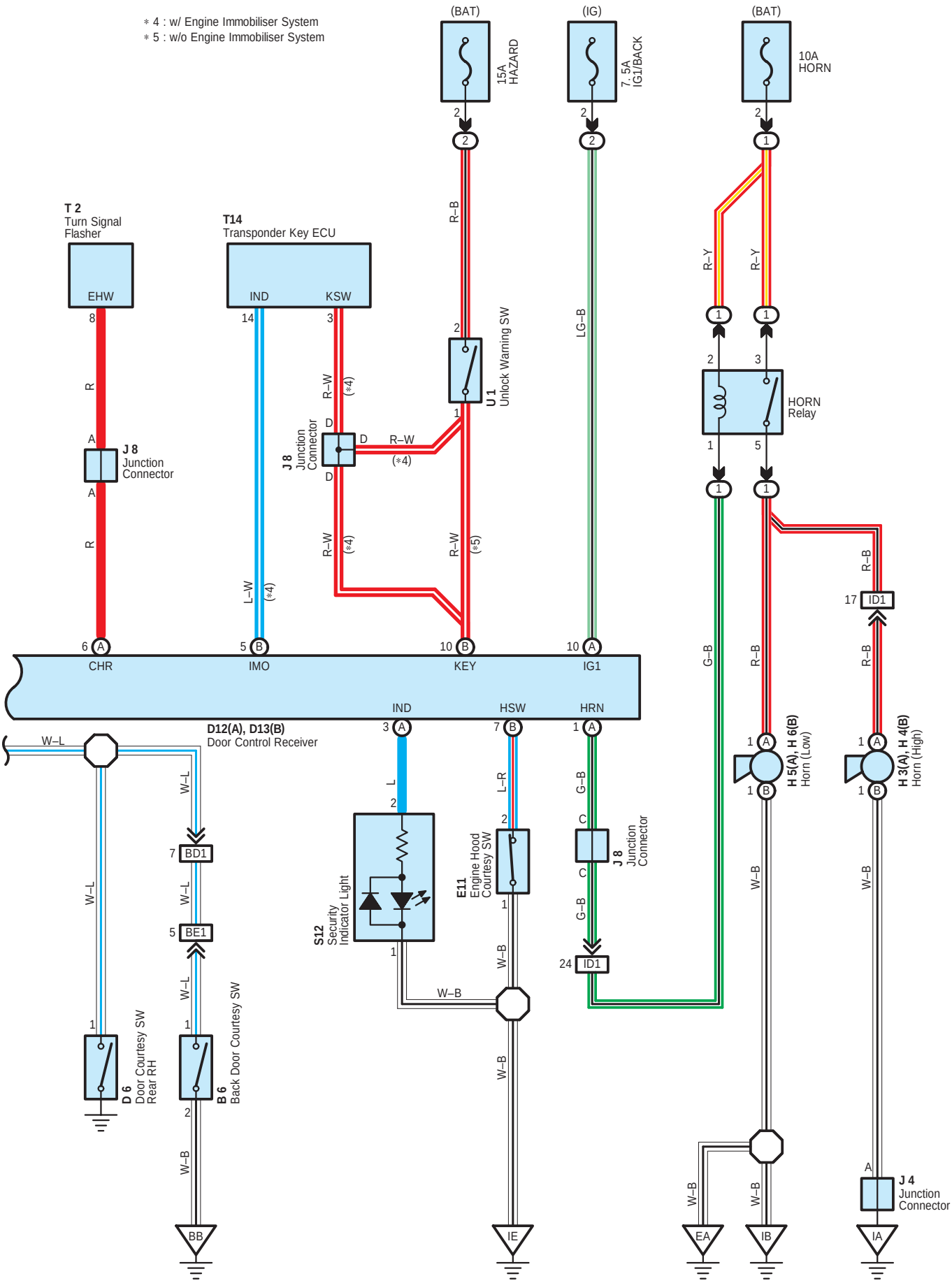
∗ 4 : w/ Engine Immobiliser System
∗ 5 : w/o Engine Immobiliser System
(BAT)
15A HAZARD
(IG)
7. 5A IG1/BACK
(BAT)
10A HORN
T 2
Turn Signal Flasher
EHW
T14
Transponder Key ECU
IND
KSW
U 1
Unlock Warning SW
J 8
Junction Connector
HORN Relay
CHR
IMO
KEY
IG1
D12(A), D13(B)
Door Control Receiver
IND
HSW
HRN
S12
Security Indicator Light
E11
Engine Hood Courtesy SW
H 5(A), H 6(B)
Horn (Low)
H 3(A), H 4(B)
Horn (High)
BD1
BE1
ID1
D 6
Door Courtesy SW Rear RH
B 6
Back Door Courtesy SW
J 4
Junction Connector
BB
IE
EA
IB
IA

○ : **Parts Location**

Code		See Page	Code		See Page	Code	See Page
B6		30 (LHD)	D13	B	28 (LHD)	J6	29 (LHD)
C5	B	28 (LHD)	D16		30 (LHD)	J8	29 (LHD)
C8	C	28 (LHD)	E11		24 (*1)	R12	31 (LHD)
D3		30 (LHD)	H3	A	24 (*1)	R13	31 (LHD)
D4		30 (LHD)	H4	B	24 (*1)	S12	29 (LHD)
D5		30 (LHD)	H5	A	24 (*1)	T2	29 (LHD)
D6		30 (LHD)	H6	B	24 (*1)	T14	29 (LHD)
D12	A	28 (LHD)	J4		29 (LHD)	U1	29 (LHD)

⬭ : **Relay Blocks**

Code	See Page	Relay Blocks (Relay Block Location)
1	22	Engine Room R/B (Engine Compartment Right)
2	23 (LHD)	Fuse Block (Left Kick Panel)

▭ : **Connector Joining Wire Harness and Wire Harness**

Code	See Page	Joining Wire Harness and Wire Harness (Connector Location)
IB2	44 (LHD)	Front Door LH Wire and Instrument Panel Wire (Left Kick Panel)
IC1	44 (LHD)	Instrument Panel Wire and Roof Wire (Cowl Side Panel RH)
ID1	44 (LHD)	Engine Room Main Wire and Instrument Panel Wire (Right Kick Panel)
IF1	44 (LHD)	Instrument Panel Wire and Floor Wire (Left Kick Panel)
BD1	45 (LHD)	Back Door No.2 Wire and Floor Wire (Rear Quarter Panel RH)
BE1	45 (LHD)	Back Door No.2 Wire and Back Door No.1 Wire (Right Side of Back Door)

▽ : **Ground Points**

Code	See Page	Ground Points Location
EA	42 (*1)	Right Fender Apron
IA	44 (LHD)	Right Kick Panel
IB	44 (LHD)	Cowl Side Panel RH
IE	44 (LHD)	Cowl Side Panel LH
BB	45 (LHD)	Right Side of Back Door

* 1 : LHD 3SZ–VE * 2 : LHD K3–VE * 3 : RHD 3SZ–VE * 4 : RHD K3–VE * 5 : RHD w/ Heater * 6 : RHD w/o Heater